COMMONWEALTH OF KENTUCKY
TRANSPORTATION CABINET
www.transportation.ky.gov/

Andy Beshear
GOVERNOR

Jim Gray
SECRETARY

December 7, 2020

CALL NO. 102
CONTRACT ID NO. 201318
ADDENDUM # 1

Subject: MCCRACKEN COUNTY, STP 5009 (022)
Letting December 11, 2020

(1)Revised - Proposal Bid Items - Pages 135-139 of 139
(2)Revised - Plan Sheets - R2A, R2B, R2C, R2F, R2G, R46 and R50

Proposal revisions are available at http://transportation.ky.gov/Construction-Procurement/.

If you have any questions, please contact us at 502-564-3500.

Sincerely,

Rachel Mills

Rachel Mills, P.E.
Director
Division of Construction Procurement

RM:mr
Enclosures

201318

PROPOSAL BID ITEMS

Report Date 12/7/20

Section: 0001 - PAVING

LINE	BID CODE	ALT	DESCRIPTION	QUANTITY	UNIT	UNIT PRIC	FP	AMOUNT
0010	00003		CRUSHED STONE BASE	20,726.00	TON		$	
0020	00069		CRUSHED AGGREGATE SIZE NO 3	1,234.00	TON		$	
0030	00100		ASPHALT SEAL AGGREGATE	105.00	TON		$	
0040	00103		ASPHALT SEAL COAT	13.00	TON		$	
0050	00212		CL2 ASPH BASE 1.00D PG64-22 (REVISED: 12-7-20)	20,462.00	TON		$	
0060	00309		CL2 ASPH SURF 0.50D PG64-22	645.00	TON		$	
0070	00356		ASPHALT MATERIAL FOR TACK	51.10	TON		$	
0080	02084		JPC PAVEMENT-8 IN	149.00	SQYD		$	
0090	23362ES403		CL2 ASPH SURF 0.5B PG64-22	2,695.00	TON		$	

Section: 0002 - ROADWAY

LINE	BID CODE	ALT	DESCRIPTION	QUANTITY	UNIT	UNIT PRIC	FP	AMOUNT
0100	00069		CRUSHED AGGREGATE SIZE NO 3	14,132.00	TON		$	
0110	00078		CRUSHED AGGREGATE SIZE NO 2	6.00	TON		$	
0120	01000		PERFORATED PIPE-4 IN	371.00	LF		$	
0130	01010		NON-PERFORATED PIPE-4 IN	72.00	LF		$	
0140	01020		PERF PIPE HEADWALL TY 1-4 IN	1.00	EACH		$	
0150	01024		PERF PIPE HEADWALL TY 2-4 IN	2.00	EACH		$	
0160	01028		PERF PIPE HEADWALL TY 3-4 IN	2.00	EACH		$	
0170	01032		PERF PIPE HEADWALL TY 4-4 IN	1.00	EACH		$	
0180	01310		REMOVE PIPE	44.00	LF		$	
0190	01691		FLUME INLET TYPE 2	6.00	EACH		$	
0200	01719		ADJUST INLET	1.00	EACH		$	
0210	01810		STANDARD CURB AND GUTTER	764.00	LF		$	
0220	01891		ISLAND HEADER CURB TYPE 2	200.00	LF		$	
0230	01987		DELINEATOR FOR GUARDRAIL BI DIRECTIONAL WHITE	24.00	EACH		$	
0240	02014		BARRICADE-TYPE III	10.00	EACH		$	
0250	02091		REMOVE PAVEMENT	380.00	SQYD		$	
0260	02159		TEMP DITCH	3,080.00	LF		$	
0270	02160		CLEAN TEMP DITCH	1,540.00	LF		$	
0280	02200		ROADWAY EXCAVATION	38,865.00	CUYD		$	
0290	02204		SPECIAL EXCAVATION	8,075.00	CUYD		$	
0300	02242		WATER	584.00	MGAL		$	
0310	02360		GUARDRAIL TERMINAL SECTION NO 1	4.00	EACH		$	
0320	02363		GUARDRAIL CONNECTOR TO BRIDGE END TY A	8.00	EACH		$	
0330	02367		GUARDRAIL END TREATMENT TYPE 1	4.00	EACH		$	
0340	02381		REMOVE GUARDRAIL	660.00	LF		$	
0350	02429		RIGHT-OF-WAY MONUMENT TYPE 1	56.00	EACH		$	
0360	02432		WITNESS POST	56.00	EACH		$	
0370	02483		CHANNEL LINING CLASS II	235.00	TON		$	
0380	02484		CHANNEL LINING CLASS III	1,154.00	TON		$	
0390	02545		CLEARING AND GRUBBING (APPROXIMATELY 24 ACRES)	1.00	LS		$	

201318

PROPOSAL BID ITEMS

Report Date 12/7/20

LINE	BID CODE	ALT	DESCRIPTION	QUANTITY	UNIT	UNIT PRIC	FP	AMOUNT
0400	02562		TEMPORARY SIGNS	676.00	SQFT		$	
0410	02585		EDGE KEY	217.00	LF		$	
0420	02602		FABRIC-GEOTEXTILE CLASS 1	1,541.00	SQYD		$	
0430	02603		FABRIC-GEOTEXTILE CLASS 2	51,112.00	SQYD		$	
0440	02607		FABRIC-GEOTEXTILE CLASS 2 FOR PIPE	463.00	SQYD	$2.00	$	$926.00
0450	02650		MAINTAIN & CONTROL TRAFFIC	1.00	LS		$	
0460	02653		LANE CLOSURE	1.00	EACH		$	
0470	02671		PORTABLE CHANGEABLE MESSAGE SIGN	2.00	EACH		$	
0480	02676		MOBILIZATION FOR MILL & TEXT	1.00	LS		$	
0490	02677		ASPHALT PAVE MILLING & TEXTURING	6.00	TON		$	
0500	02690		SAFELOADING	68.00	CUYD		$	
0510	02696		SHOULDER RUMBLE STRIPS	9,176.00	LF		$	
0520	02697		EDGELINE RUMBLE STRIPS	132.00	LF		$	
0530	02701		TEMP SILT FENCE	3,080.00	LF		$	
0540	02703		SILT TRAP TYPE A	24.00	EACH		$	
0550	02704		SILT TRAP TYPE B	24.00	EACH		$	
0560	02705		SILT TRAP TYPE C	24.00	EACH		$	
0570	02706		CLEAN SILT TRAP TYPE A	24.00	EACH		$	
0580	02707		CLEAN SILT TRAP TYPE B	24.00	EACH		$	
0590	02708		CLEAN SILT TRAP TYPE C	24.00	EACH		$	
0600	02726		STAKING	1.00	LS		$	
0610	02731		REMOVE STRUCTURE (EXISTING 10' X 4' RCBC RT STA 186+05)	1.00	LS		$	
0620	02731		REMOVE STRUCTURE (EXISTING BRIDGE RT STA 195+14)	1.00	LS		$	
0630	02731		REMOVE STRUCTURE (EXISTING BRIDGE RT STA 198+61)	1.00	LS		$	
0640	03171		CONCRETE BARRIER WALL TYPE 9T	1,680.00	LF		$	
0650	04933		TEMP SIGNAL 2 PHASE	2.00	EACH		$	
0660	05950		EROSION CONTROL BLANKET	3,347.00	SQYD		$	
0670	05952		TEMP MULCH	77,440.00	SQYD		$	
0680	05953		TEMP SEEDING AND PROTECTION	58,080.00	SQYD		$	
0690	05963		INITIAL FERTILIZER	3.00	TON		$	
0700	05964		MAINTENANCE FERTILIZER	5.00	TON		$	
0710	05985		SEEDING AND PROTECTION	71,888.00	SQYD		$	
0720	05990		SODDING	11,379.00	SQYD		$	
0730	05992		AGRICULTURAL LIMESTONE	45.00	TON		$	
0740	06510		PAVE STRIPING-TEMP PAINT-4 IN	35,949.00	LF		$	
0750	06514		PAVE STRIPING-PERM PAINT-4 IN	30,807.00	LF		$	
0760	06516		PAVE STRIPING-PERM PAINT-8 IN	365.00	LF		$	
0770	06550		PAVE STRIPING-TEMP REM TAPE-W	3,136.00	LF		$	
0780	06551		PAVE STRIPING-TEMP REM TAPE-Y	5,194.00	LF		$	
0790	06568		PAVE MARKING-THERMO STOP BAR-24IN	156.00	LF		$	
0800	06570		PAVE MARKING-PAINT CROSS-HATCH	8,258.00	SQFT		$	
0810	06574		PAVE MARKING-THERMO CURV ARROW	33.00	EACH		$	
0820	06575		PAVE MARKING-THERMO COMB ARROW	1.00	EACH		$	
0830	06576		PAVE MARKING-THERMO ONLY	2.00	EACH		$	
0840	06588		PAVEMENT MARKER TY IVA-BY TEMP	294.00	EACH		$	
0850	08901		CRASH CUSHION TY VI CLASS BT TL2	8.00	EACH		$	
0860	10020NS		FUEL ADJUSTMENT	56,411.00	DOLL	$1.00	$	$56,411.00

201318

PROPOSAL BID ITEMS

Report Date 12/7/20

LINE	BID CODE	ALT	DESCRIPTION	QUANTITY	UNIT	UNIT PRIC	FP	AMOUNT
0870	10030NS		ASPHALT ADJUSTMENT	93,307.00	DOLL	$1.00	$	$93,307.00
0880	20100ES842		PAVE MARK TEMP PAINT LINE ARROW	2.00	EACH		$	
0890	20191ED		OBJECT MARKER TY 3	4.00	EACH		$	
0900	20455NS835		VIDEO CAMERA	2.00	EACH		$	
0910	20550ND		SAWCUT PAVEMENT	2,880.00	LF		$	
0920	21802EN		G/R STEEL W BEAM-S FACE (7 FT POST)	1,196.50	LF		$	
0930	22765NN		ADVANCED WARNING BEACON	2.00	EACH		$	
0940	23010EN		PAVE MARK TEMP PAINT STOP BAR-24 IN	93.00	LF		$	
0950	23274EN11F		TURF REINFORCEMENT MAT 1	2,230.00	SQYD		$	
0960	23822EC		CORED HOLE DRAINAGE BOX CON-15 IN	1.00	EACH		$	
0970	24489EC		INLAID PAVEMENT MARKER	361.00	EACH		$	
0980	24814EC		PIPELINE INSPECTION	90.00	LF		$	

Section: 0003 - DRAINAGE

LINE	BID CODE	ALT	DESCRIPTION	QUANTITY	UNIT	UNIT PRIC	FP	AMOUNT
0990	00440		ENTRANCE PIPE-15 IN	79.00	LF		$	
1000	00441		ENTRANCE PIPE-18 IN	258.00	LF		$	
1010	00443		ENTRANCE PIPE-24 IN	86.00	LF		$	
1020	00450		ENTRANCE PIPE-15 IN EQUIV	36.00	LF		$	
1030	00451		ENTRANCE PIPE-18 IN EQUIV	86.00	LF		$	
1040	00452		ENTRANCE PIPE-24 IN EQUIV	85.00	LF		$	
1050	00491		CULVERT PIPE-18 IN EQUIV	148.00	LF		$	
1060	00521		STORM SEWER PIPE-15 IN	31.00	LF		$	
1070	01433		SLOPED BOX OUTLET TYPE 1-18 IN	1.00	EACH		$	
1080	01440		SLOPED BOX INLET-OUTLET TYPE 1	4.00	EACH		$	
1090	01450		S & F BOX INLET-OUTLET-18 IN	1.00	EACH		$	
1100	01577		DROP BOX INLET TYPE 14	2.00	EACH		$	
1110	01634		CAP CURB BOX INLET	1.00	EACH		$	
1120	01705		REMOVE CURB & GUTTER BOX INLET	1.00	EACH		$	

Section: 0004 - BRIDGE - OVER MASSAC CREEK - DWG. 27607

LINE	BID CODE	ALT	DESCRIPTION	QUANTITY	UNIT	UNIT PRIC	FP	AMOUNT
1130	02231		STRUCTURE GRANULAR BACKFILL	660.00	CUYD		$	
1140	03299		ARMORED EDGE FOR CONCRETE	128.70	LF		$	
1150	08003		FOUNDATION PREPARATION	1.00	LS		$	
1160	08019		CYCLOPEAN STONE RIP RAP	1,123.00	TON		$	
1170	08033		TEST PILES	158.00	LF		$	
1180	08051		PILES-STEEL HP14X89	2,499.00	LF		$	
1190	08100		CONCRETE-CLASS A	260.50	CUYD		$	
1200	08104		CONCRETE-CLASS AA	194.50	CUYD		$	
1210	08150		STEEL REINFORCEMENT	15,122.00	LB		$	
1220	08151		STEEL REINFORCEMENT-EPOXY COATED	42,119.00	LB		$	
1230	08500		APPROACH SLAB	358.00	SQYD		$	
1240	08670		PRECAST PC BOX BEAM SB27	564.00	LF		$	
1250	21532ED		RAIL SYSTEM TYPE III	144.00	LF		$	

PROPOSAL BID ITEMS

Report Date 12/7/20

LINE	BID CODE	ALT	DESCRIPTION	QUANTITY	UNIT	UNIT PRIC	FP	AMOUNT
1260	23233EC		DYNAMIC PILE TESTING	4.00	EACH		$	
1270	23378EC		CONCRETE SEALING	9,255.00	SQFT		$	

Section: 0005 - BRIDGE - OVERFLOW STRUCTURE - DWG. 27608

LINE	BID CODE	ALT	DESCRIPTION	QUANTITY	UNIT	UNIT PRIC	FP	AMOUNT
1280	02231		STRUCTURE GRANULAR BACKFILL	246.00	CUYD		$	
1290	03299		ARMORED EDGE FOR CONCRETE	129.50	LF		$	
1300	08003		FOUNDATION PREPARATION	1.00	LS		$	
1310	08019		CYCLOPEAN STONE RIP RAP	1,918.00	TON		$	
1320	08033		TEST PILES	230.00	LF		$	
1330	08051		PILES-STEEL HP14X89	4,242.00	LF		$	
1340	08100		CONCRETE-CLASS A	329.00	CUYD		$	
1350	08104		CONCRETE-CLASS AA	391.50	CUYD		$	
1360	08150		STEEL REINFORCEMENT	44,418.00	LB		$	
1370	08151		STEEL REINFORCEMENT-EPOXY COATED	114,631.00	LB		$	
1380	08500		APPROACH SLAB	359.80	SQYD		$	
1390	08632		PRECAST PC I BEAM TYPE 2	1,242.70	LF		$	
1400	21532ED		RAIL SYSTEM TYPE III	318.00	LF		$	
1410	23233EC		DYNAMIC PILE TESTING	8.00	EACH		$	
1420	23378EC		CONCRETE SEALING	5,655.00	SQFT		$	
1430	23813EC		DECK DRAIN	3.00	EACH		$	

Section: 0006 - BRIDGE - 10' X 4' R C BOX CULVERT - DWG. 27609

LINE	BID CODE	ALT	DESCRIPTION	QUANTITY	UNIT	UNIT PRIC	FP	AMOUNT
1440	08003		FOUNDATION PREPARATION	1.00	LS		$	
1450	08100		CONCRETE-CLASS A	169.30	CUYD		$	
1460	08150		STEEL REINFORCEMENT	19,675.00	LB		$	

Section: 0007 - BRIDGE - DBL. 10' X 5' R C BOX CULVERT EXT. - DWG. 27610

LINE	BID CODE	ALT	DESCRIPTION	QUANTITY	UNIT	UNIT PRIC	FP	AMOUNT
1470	02223		GRANULAR EMBANKMENT	149.00	CUYD		$	
1480	02403		REMOVE CONCRETE MASONRY	10.00	CUYD		$	
1490	08003		FOUNDATION PREPARATION	1.00	LS		$	
1500	08100		CONCRETE-CLASS A	142.20	CUYD		$	
1510	08150		STEEL REINFORCEMENT	18,838.00	LB		$	

Section: 0008 - SIGNALIZATION

LINE	BID CODE	ALT	DESCRIPTION	QUANTITY	UNIT	UNIT PRIC	FP	AMOUNT
1520	04820		TRENCHING AND BACKFILLING	34.00	LF		$	
1530	04844		CABLE-NO. 14/5C	1,502.00	LF		$	
1540	04885		MESSENGER-10800 LB	402.00	LF		$	

201318

PROPOSAL BID ITEMS

Report Date 12/7/20

LINE	BID CODE	ALT	DESCRIPTION	QUANTITY	UNIT	UNIT PRIC	FP	AMOUNT
1550	04932		INSTALL STEEL STRAIN POLE	4.00	EACH		$	
1560	20188NS835		INSTALL LED SIGNAL-3 SECTION	12.00	EACH		$	
1570	20390NS835		INSTALL COORDINATING UNIT	1.00	EACH		$	
1580	23157EN		TRAFFIC SIGNAL POLE BASE	68.00	CUYD		$	
1590	24901EC		PVC CONDUIT-2 IN-SCHEDULE 80	102.00	LF		$	
1600	24908EC		INSTALL SIGNAL CONTROLLER-TY ATC (WITH 1C ATC MODULE)	1.00	EACH		$	
1610	24955ED		REMOVE SIGNAL EQUIPMENT	1.00	EACH		$	
1620	26119EC		INSTALL RADAR PRESENCE DETECTOR TYPE A	4.00	EACH		$	
1630	26120EC		INSTALL RADAR ADVANCE DETECTOR TYPE B	2.00	EACH		$	

Section: 0009 - DEMOBILIZATION &/OR MOBILIZATION

LINE	BID CODE	ALT	DESCRIPTION	QUANTITY	UNIT	UNIT PRIC	FP	AMOUNT
1640	02568		MOBILIZATION	1.00	LS		$	
1650	02569		DEMOBILIZATION	1.00	LS		$	

COUNTY OF	ITEM NO.	SHEET NO.
McCRACKEN	I-152.00	R2A

TYPICAL SECTIONS

NOT TO SCALE

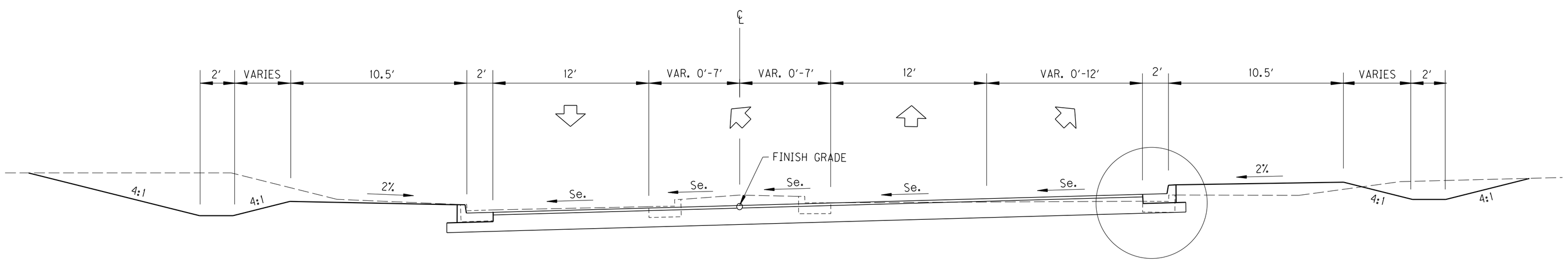

McCRACKEN BOULEVARD

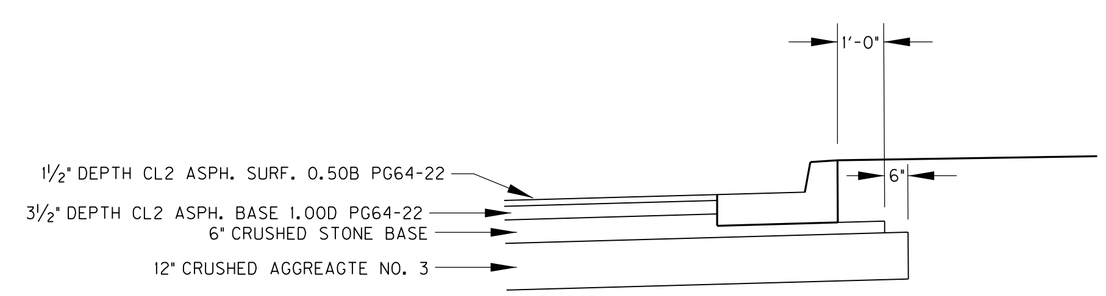

DETAIL A

SCALE: 1"=N/A

TYPICAL SECTIONS
McCRACKEN BOULEVARD

FILE NAME: H:\13074 US 62 MCCRACKEN CO\I-152.00\CONTRACT PLANS AND PROPOSAL\CONTRACT PLAN SET\ROADWAY\R002OATS.DGN

USER: FHOOVER
DATE PLOTTED: December 3, 2020

E-SHEET NAME:

MicroStation v8.11.9.832

COUNTY OF	ITEM NO.	SHEET NO.
McCRACKEN	I-152.00	R2A

REVISED 12-4-20

TYPICAL SECTIONS

NOT TO SCALE

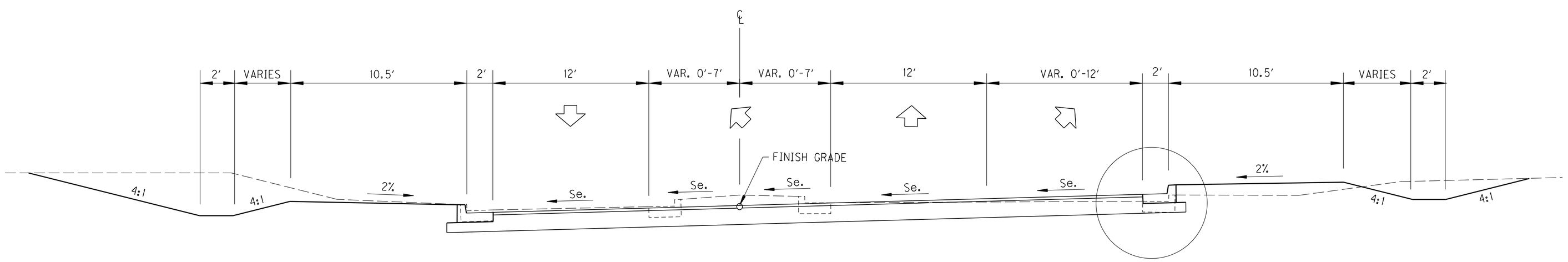

DETAIL A

McCRACKEN BOULEVARD

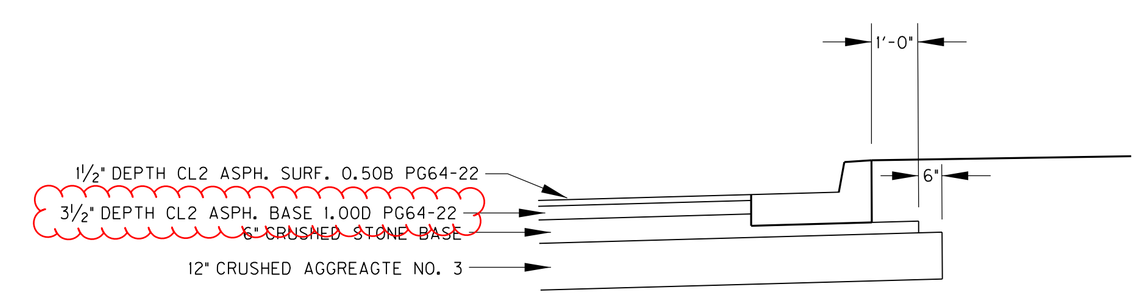

DETAIL A

SCALE: 1"=N/A

TYPICAL SECTIONS
McCRACKEN BOULEVARD

FILE NAME: H:\13074 US 62 MCCRACKEN CO\I-152.00\CONTRACT PLANS AND PROPOSAL\CONTRACT PLAN SET\ROADWAY\R002OATS.DGN

USER: FHOOVER
DATE PLOTTED: December 3, 2020

E-SHEET NAME:

MicroStation v8.11.9.832

COUNTY OF	ITEM NO.	SHEET NO.
McCRACKEN	I-152.00	R2B

TYPICAL SECTIONS

NOT TO SCALE

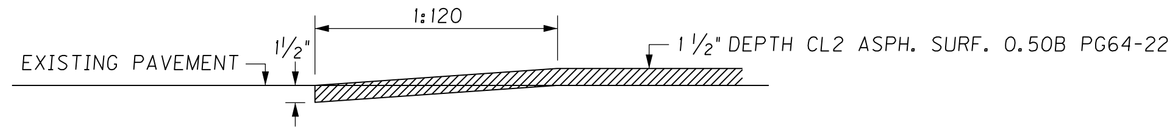

TAPERING OF OVERLAY ON EXISTING MASSAC CHURCH ROAD

(1) SEE CROSS SECTIONS FOR SLOPES OUTSIDE THE LIMITS OF THE SHOULDER.

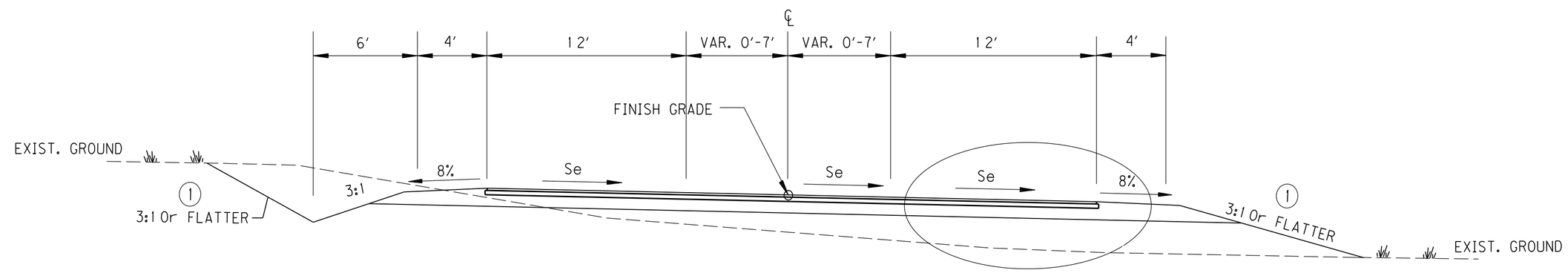

DETAIL A

RELOCATED MASSAC CHURCH ROAD

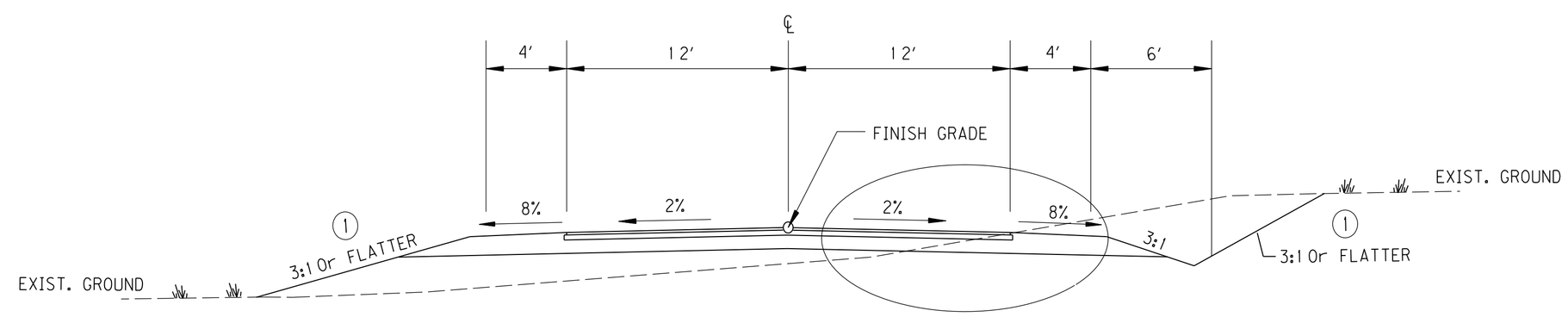

DETAIL A

KIMBRELL DRIVE

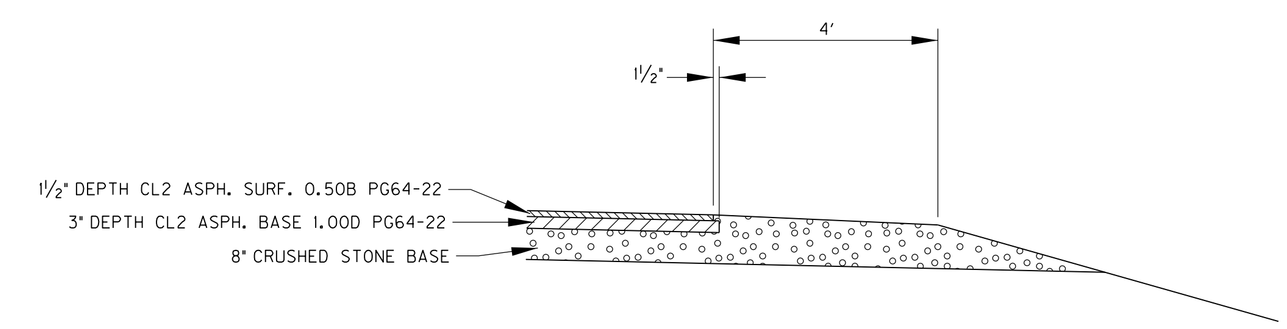

DETAIL A

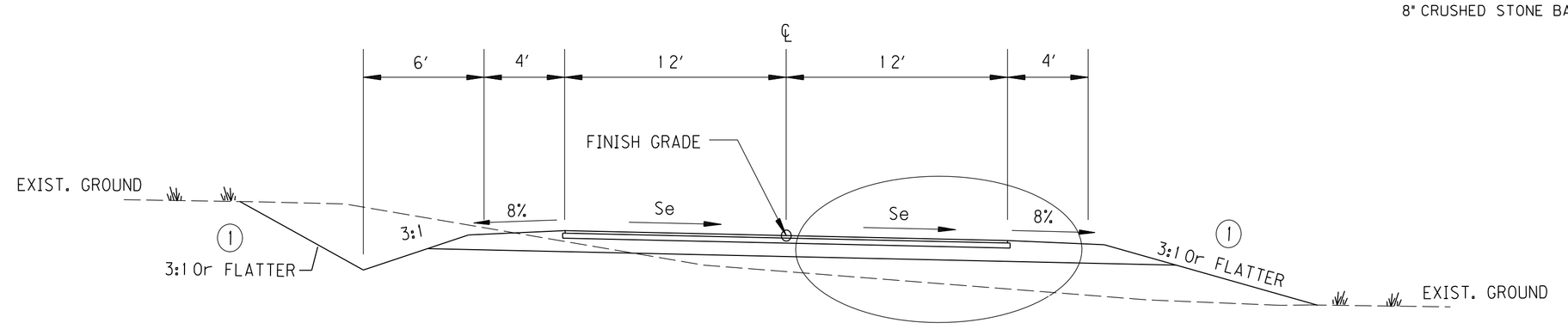

DETAIL A

RELOCATED GUM SPRINGS ROAD

SCALE: 1"=N/A

TYPICAL SECTIONS
APPROACH ROADS

MicroStation v8.11.9.832 | E-SHEET NAME: | USER: FHOOVER DATE PLOTTED: December 3, 2020 | FILE NAME: H:\13074 US 62 MCCRACKEN CO\I-152.00\CONTRACT PLANS AND PROPOSAL\CONTRACT PLAN SET\ROADWAY\R0020BTS.DGN

COUNTY OF	ITEM NO.	SHEET NO.
McCRACKEN	1-152.00	R2B

REVISED 12-4-20

TYPICAL SECTIONS

NOT TO SCALE

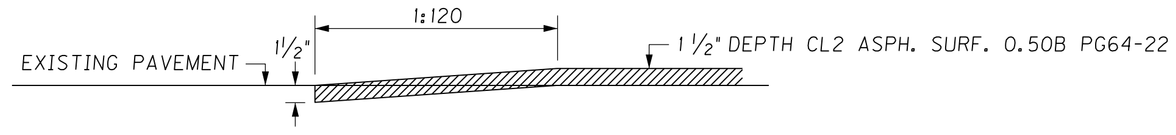

TAPERING OF OVERLAY ON EXISTING MASSAC CHURCH ROAD

(1) SEE CROSS SECTIONS FOR SLOPES OUTSIDE THE LIMITS OF THE SHOULDER.

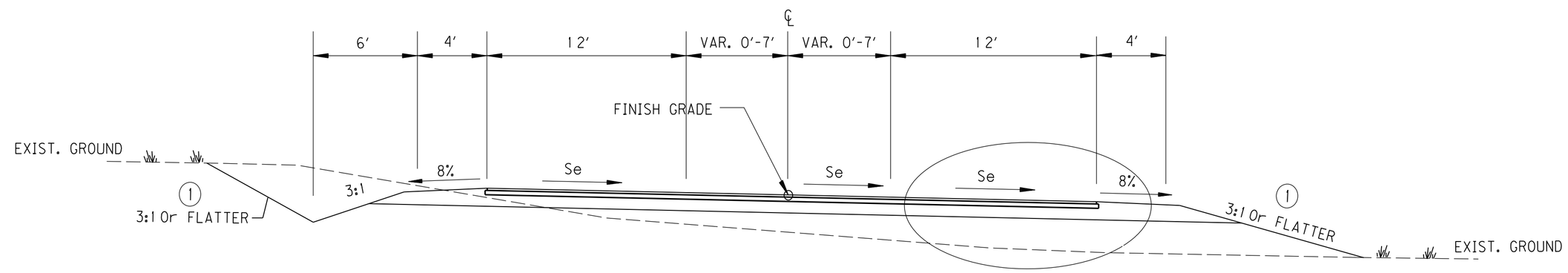

DETAIL A

RELOCATED MASSAC CHURCH ROAD

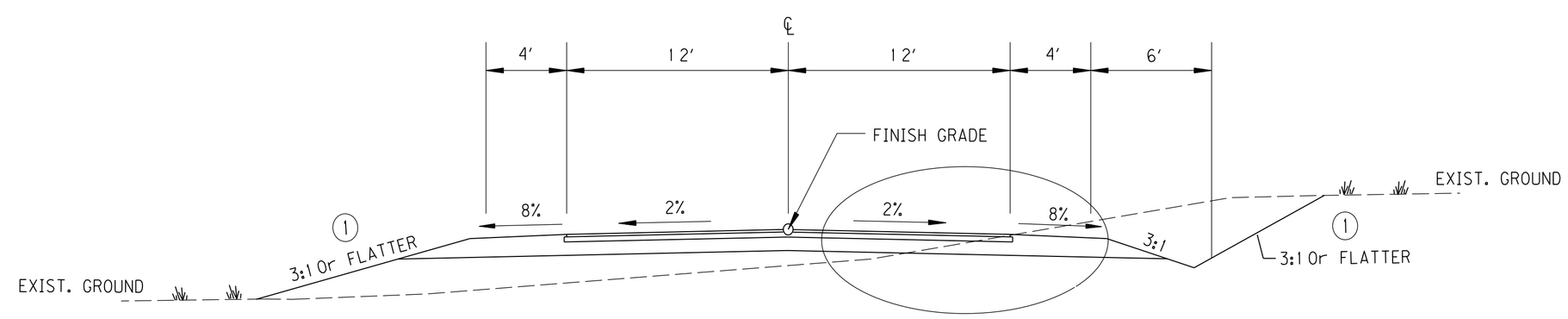

DETAIL A

KIMBRELL DRIVE

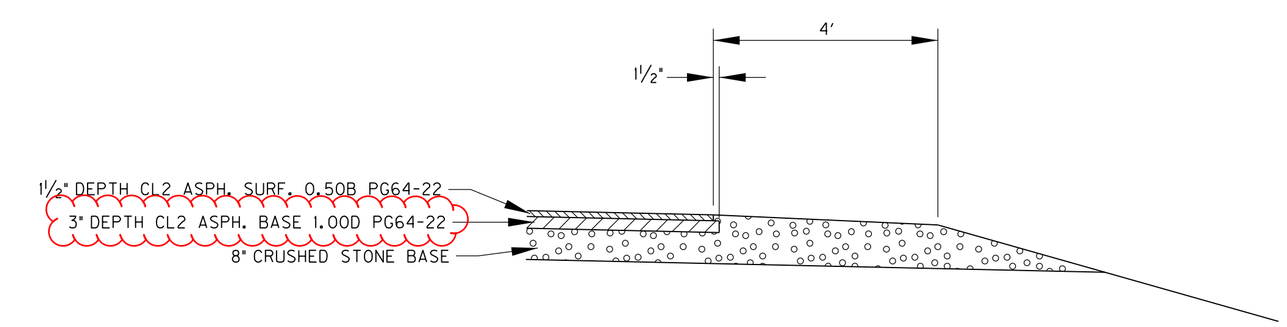

DETAIL A

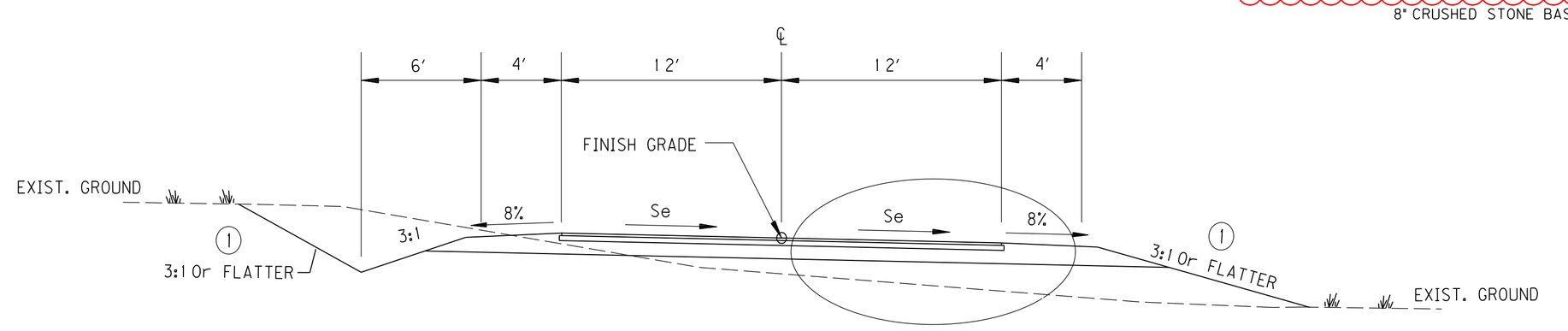

DETAIL A

RELOCATED GUM SPRINGS ROAD

SCALE: 1"=N/A

TYPICAL SECTIONS
APPROACH ROADS

MicroStation v8.11.9.832 | E-SHEET NAME: | USER: FHOOVER DATE PLOTTED: December 3, 2020 | FILE NAME: H:\13074 US 62 MCCRACKEN CO\1-152.00\CONTRACT PLANS AND PROPOSAL\CONTRACT PLAN SET\ROADWAY\R0020BTS.DGN

COUNTY OF	ITEM NO.	SHEET NO.
McCRACKEN	I-152.00	R2C

TYPICAL SECTIONS

NOT TO SCALE

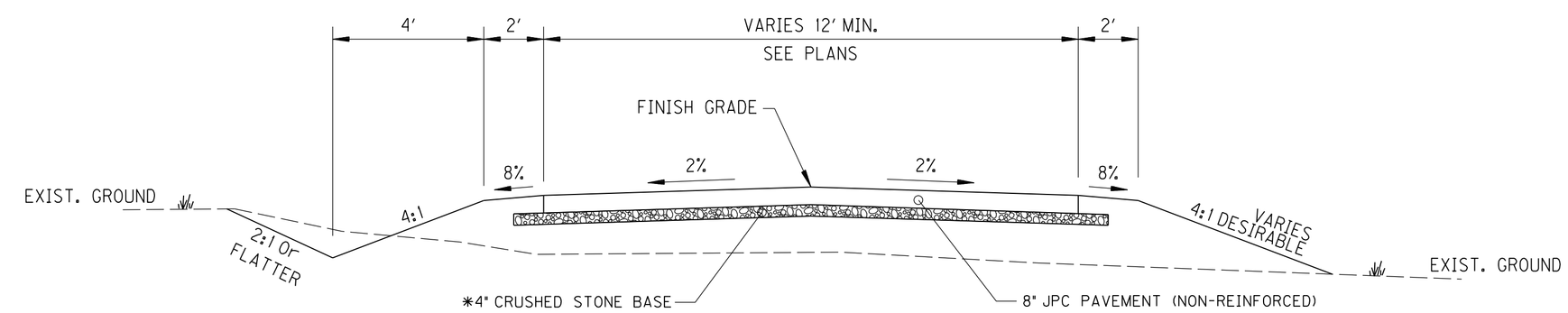

* 6" CRUSHED STONE BASE FOR COMMERCIAL ENTRANCE LT. STA. 156+60

CONCRETE ENTRANCES

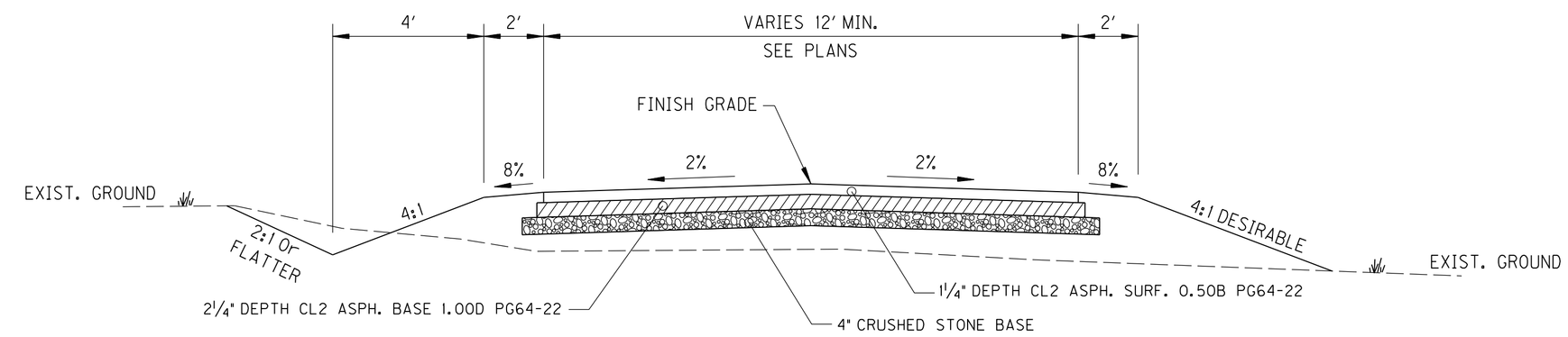

ASPHALT ENTRANCES

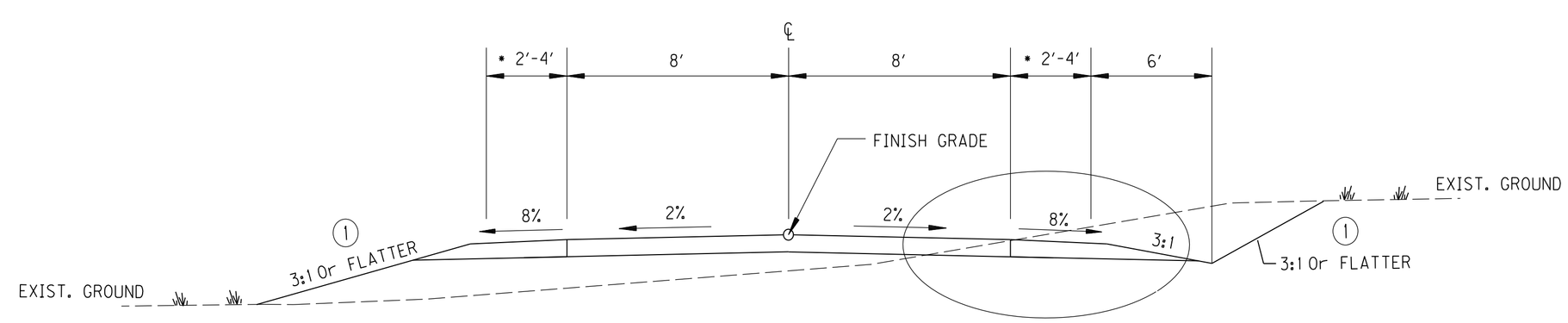

DETAIL A

FOXBOROUGH COURT ACCESS ROAD

• 4' FOXBOROUGH LANE 2' ACCESS ROAD

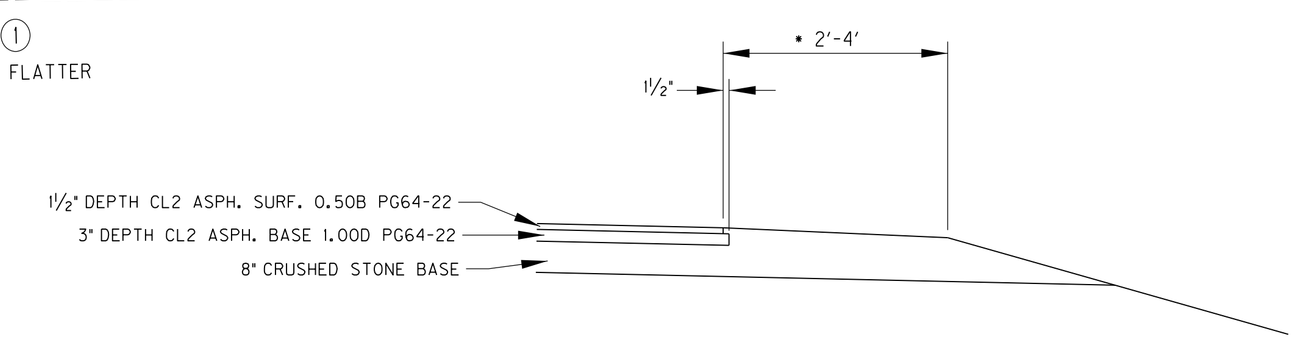

DETAIL A

SCALE: 1"=N/A

TYPICAL SECTIONS
APPROACH ROADS & ENTRANCES

MicroStation v8.11.9.832 E-SHEET NAME: USER: CSTOERGE DATE PLOTTED: December 3, 2020 FILE NAME: H:\13074 US 62 McCRACKEN CO\I-152.00\CONTRACT PLANS AND PROPOSAL\CONTRACT PLAN SET\ROADWAY\R0020CTS.DGN

COUNTY OF	ITEM NO.	SHEET NO.
McCRACKEN	I-152.00	R2C

REVISED 12-4-20

TYPICAL SECTIONS

NOT TO SCALE

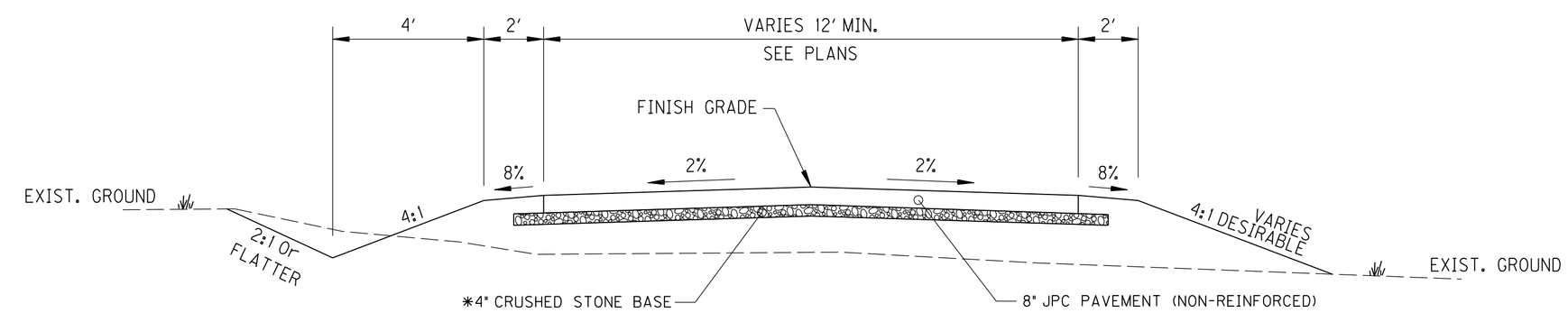

* 6" CRUSHED STONE BASE FOR COMMERCIAL ENTRANCE LT. STA. 156+60

CONCRETE ENTRANCES

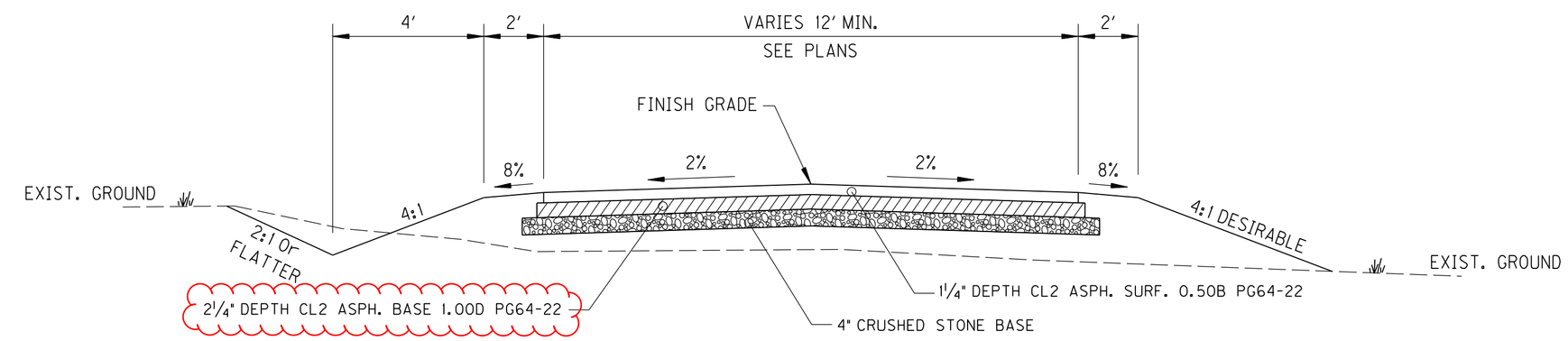

ASPHALT ENTRANCES

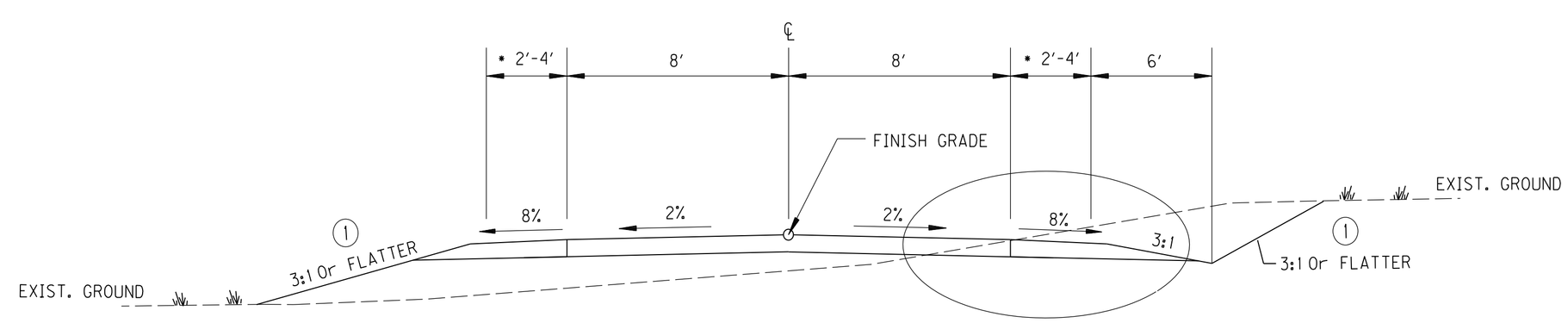

DETAIL A

FOXBOROUGH COURT ACCESS ROAD

• 4' FOXBOROUGH LANE 2' ACCESS ROAD

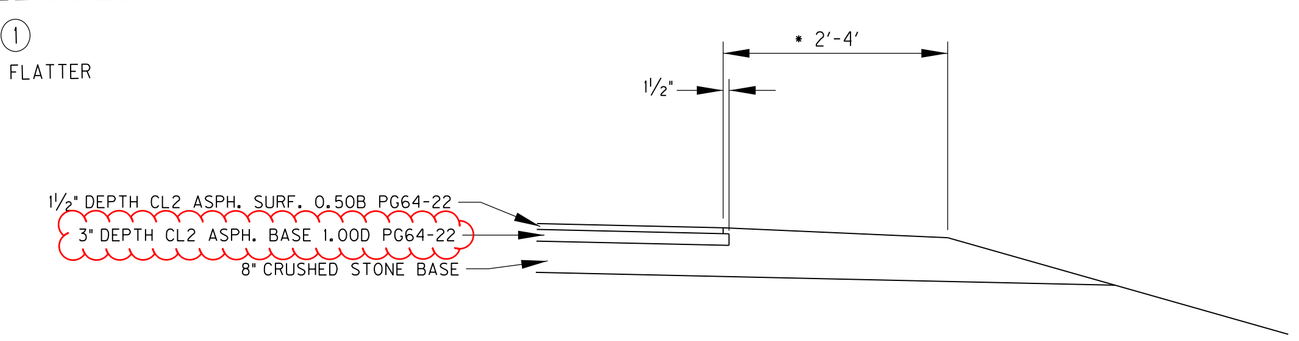

DETAIL A

SCALE: 1"=N/A

TYPICAL SECTIONS
APPROACH ROADS & ENTRANCES

FILE NAME: H:\13074 US 62 McCRACKEN CO\I-152.00\CONTRACT PLANS AND PROPOSAL\CONTRACT PLAN SET\ROADWAY\R002DCTS.DGN

USER: CSTOERGE
DATE PLOTTED: December 3, 2020

E-SHEET NAME:

MicroStation v8.11.9.832

COUNTY OF	ITEM NO.	SHEET NO.
McCRACKEN	1-152.00	R2F

PAVING AREAS

ITEM CODE	ITEM	U.S. 62	McCRACKEN BOULEVARD	MASSAC CHURCH ROAD	ACCESS ROAD	FOXBOROUGH COURT	KIMBRELL DRIVE	GUM SPRINGS ROAD	ENTRANCES	MAINTENANCE OF TRAFFIC			TOTAL PROJECT
		S Q U A R E Y A R D S											
0003	3" CRUSHED STONE BASE		4,107										4,107
0003	4" CRUSHED STONE BASE	33,487							1,986				35,473
0003	6" CRUSHED STONE BASE								189				189
0003	8" CRUSHED STONE BASE			1,771	606	86	347	816					3,626
0003	10" CRUSHED STONE BASE									2,767			2,767
(1) 0003	VARIABLE DEPTH CRUSHED STONE BASE												
0069	12" CRUSHED AGGREGATE NO. 3		2,284										2,284
0100	ASPHALT SEAL AGGREGATE	5,217											5,217
103	ASPHALT SEAL COAT	5,217											5,217
212	2.25" CL2 ASPHALT BASE 1.00D PG64-22								1,963				1,963
212	2.75" CL2 ASPHALT BASE 1.00D PG64-22	41,463								2,804			44,267
212	3" CL2 ASPHALT BASE 1.00D PG64-22	76,050		1,786	616	87	351	825					79,715
212	3.5" CL2 ASPHALT BASE 1.00D PG64-22		1,906										1,906
309	1.5" CL2 ASPHALT SURFACE 0.50D PG64-22	7,813											7,813
356	ASPHALT MATERIAL FOR TACK	117,513	1,906	1,786	616	87	351	825	1,963	2,804			127,851
2084	JPC PAVEMENT - 8"								149				149
23362ES403	1.25" CL2 ASPHALT SURFACE 0.50B PG64-22								1,939				1,939
23362ES403	1.5" CL2 ASPHALT SURFACE 0.50B PG64-22	33,487	1,906	2,137	606	86	347	816		2,767			42,152

(1) CALCULATED USING AN END AREA/VOLUME METHOD

SCALE: 1"=N/A

PAVING AREAS

MicroStation v8.11.9.832 E-SHEET NAME: USER: CSTOERGE DATE PLOTTED: December 3, 2020 FILE NAME: H:\13074 US 62 MCCRACKEN CO\1-152.00\CONTRACT PLANS AND PROPOSAL\CONTRACT PLAN SET\ROADWAY\R002OFSU.DGN

COUNTY OF	ITEM NO.	SHEET NO.
McCRACKEN	1-152.00	R2F

REVISED 12-4-20

PAVING AREAS

ITEM CODE	ITEM	U.S. 62	McCRACKEN BOULEVARD	MASSAC CHURCH ROAD	ACCESS ROAD	FOXBOROUGH COURT	KIMBRELL DRIVE	GUM SPRINGS ROAD	ENTRANCES	MAINTENANCE OF TRAFFIC			TOTAL PROJECT
		S Q U A R E Y A R D S											
0003	3" CRUSHED STONE BASE		4,107										4,107
0003	4" CRUSHED STONE BASE	33,487							1,986				35,473
0003	6" CRUSHED STONE BASE								189				189
0003	8" CRUSHED STONE BASE			1,771	606	86	347	816					3,626
0003	10" CRUSHED STONE BASE									2,767			2,767
(1) 0003	VARIABLE DEPTH CRUSHED STONE BASE												
0069	12" CRUSHED AGGREGATE NO. 3		2,284										2,284
0100	ASPHALT SEAL AGGREGATE	5,217											5,217
103	ASPHALT SEAL COAT	5,217											5,217
212	2.25" CL2 ASPHALT BASE 1.00D PG64-22								1,963				1,963
212	2.75" CL2 ASPHALT BASE 1.00D PG64-22	41,463								2,804			44,267
212	3" CL2 ASPHALT BASE 1.00D PG64-22	76,050		1,786	616	87	351	825					79,715
212	3.5" CL2 ASPHALT BASE 1.00D PG64-22		1,906										1,906
309	1.5" CL2 ASPHALT SURFACE 0.50D PG64-22	7,813											7,813
356	ASPHALT MATERIAL FOR TACK	117,513	1,906	1,786	616	87	351	825	1,963	2,804			127,851
2084	JPC PAVEMENT - 8"								149				149
23362ES403	1.25" CL2 ASPHALT SURFACE 0.50B PG64-22								1,939				1,939
23362ES403	1.5" CL2 ASPHALT SURFACE 0.50B PG64-22	33,487	1,906	2,137	606	86	347	816		2,767			42,152

(1) CALCULATED USING AN END AREA/VOLUME METHOD

SCALE: 1"=N/A

PAVING AREAS

FILE NAME: H:\13074 US 62 MCCRACKEN CO\1-152.00\CONTRACT PLANS AND PROPOSAL\CONTRACT PLAN SET\ROADWAY\R002OFSU.DGN
USER: CSTOERGE
DATE PLOTTED: December 3, 2020
E-SHEET NAME:
MicroStation v8.11.9.832

COUNTY OF	ITEM NO.	SHEET NO.
McCRACKEN	1-152.00	R2G

	ITEM CODE	ITEM DESCRIPTION	UNIT	MAINLINE	McCRACKEN BOULEVARD	MASSAC CHURCH ROAD	ACCESS ROAD	FOXBOROUGH COURT	KIMBRELL DRIVE	GUM SPRINGS ROAD	ENTRANCES	MAINTENANCE OF TRAFFIC	**TOTAL PROJECT**
(1)	0003	CRUSHED STONE BASE	TON	15,268	709	1,181	454	70	224	706	522	1,592	20,726
(2)	0069	CRUSHED AGGREGATE SIZE NO. 3	TON		1,234								1,234
	0100	ASPHALT SEAL AGGREGATE	TON	105									105
	0103	ASPHALT SEAL COAT	TON	13									13
	0212	CL2 ASPHALT BASE 1.00D PG64-22	TON	18,820	367	295	102	15	58	137	243	425	20,462
	0309	CL2 ASPHALT SURFACE 0.50D PG64-22	TON	645									645
	0356	ASPHALT MATERIAL FOR TACK	TON	47.0	0.8	0.7	0.2	0.1	0.1	0.3	0.8	1.1	51.1
	2084	JPC PAVEMENT - 8 INCH	SQ YD								149		149
	23362ES403	1.5" CL2 ASPHALT SURFACE 0.50B PG64-22	TON	1,842	158	177	50	8	29	68	134	229	2,695

NOTES

ALL ASPHALT MIXTURES SHALL BE ESTIMATED AT 110 LBS. PER SQ. YD. PER INCH OF DEPTH, UNLESS NOTED OTHERWISE.

(1) ESTIMATED AT 115 LBS. PER SQ. YD. PER INCH OF DEPTH

(2) ESTIMATED AT 90 LBS. PER SQ. YD. PER INCH OF DEPTH

SCALE: 1"=N/A

PAVING SUMMARY

MicroStation v8.11.9.832 E-SHEET NAME: USER: FHOOVER DATE PLOTTED: December 3, 2020 FILE NAME: H:\13074 US 62 MCCRACKEN CO\1-152.00\CONTRACT PLANS AND PROPOSAL\CONTRACT PLAN SET\ROADWAY\R002OGSU.DGN

COUNTY OF	ITEM NO.	SHEET NO.
McCRACKEN	1-152.00	R2G

REVISED 12-4-20

	ITEM CODE	ITEM DESCRIPTION	UNIT	MAINLINE	McCRACKEN BOULEVARD	MASSAC CHURCH ROAD	ACCESS ROAD	FOXBOROUGH COURT	KIMBRELL DRIVE	GUM SPRINGS ROAD	ENTRANCES	MAINTENANCE OF TRAFFIC	**TOTAL PROJECT**
(1)	0003	CRUSHED STONE BASE	TON	15,268	709	1,181	454	70	224	706	522	1,592	20,726
(2)	0069	CRUSHED AGGREGATE SIZE NO. 3	TON		1,234								1,234
	0100	ASPHALT SEAL AGGREGATE	TON	105									105
	0103	ASPHALT SEAL COAT	TON	13									13
	0212	CL2 ASPHALT BASE 1.00D PG64-22	TON	18,820	367	295	102	15	58	137	243	425	20,462
	0309	CL2 ASPHALT SURFACE 0.50D PG64-22	TON	645									645
	0356	ASPHALT MATERIAL FOR TACK	TON	47.0	0.8	0.7	0.2	0.1	0.1	0.3	0.8	1.1	51.1
	2084	JPC PAVEMENT - 8 INCH	SQ YD								149		149
	23362ES403	1.5" CL2 ASPHALT SURFACE 0.50B PG64-22	TON	1,842	158	177	50	8	29	68	134	229	2,695

NOTES

ALL ASPHALT MIXTURES SHALL BE ESTIMATED AT 110 LBS. PER SQ. YD. PER INCH OF DEPTH, UNLESS NOTED OTHERWISE.

(1) ESTIMATED AT 115 LBS. PER SQ. YD. PER INCH OF DEPTH

(2) ESTIMATED AT 90 LBS. PER SQ. YD. PER INCH OF DEPTH

SCALE: 1"=N/A

PAVING SUMMARY

MicroStation v8.11.9.832 E-SHEET NAME: USER: FHOOVER DATE PLOTTED: December 3, 2020 FILE NAME: H:\13074 US 62 MCCRACKEN CO\1-152.00\CONTRACT PLANS AND PROPOSAL\CONTRACT PLAN SET\ROADWAY\R002OGSU.DGN

COUNTY OF	ITEM NO.	SHEET NO.
McCRACKEN	1-152.00	R46

MAINTENANCE OF TRAFFIC
PHASE 1

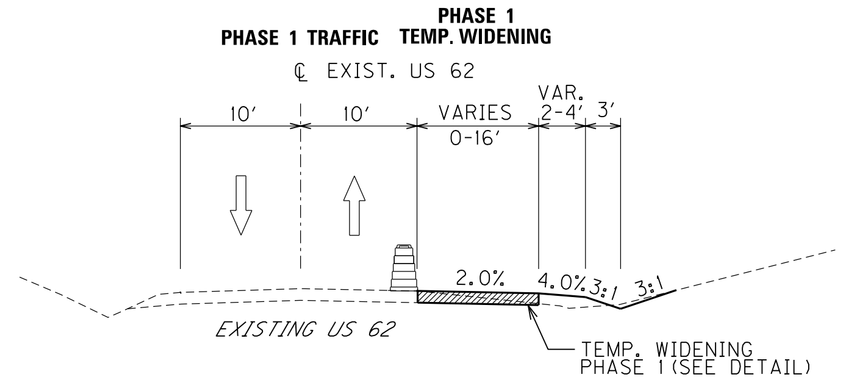

STA. 146+91 TO STA. 158+87
TYPICAL SECTION A–A

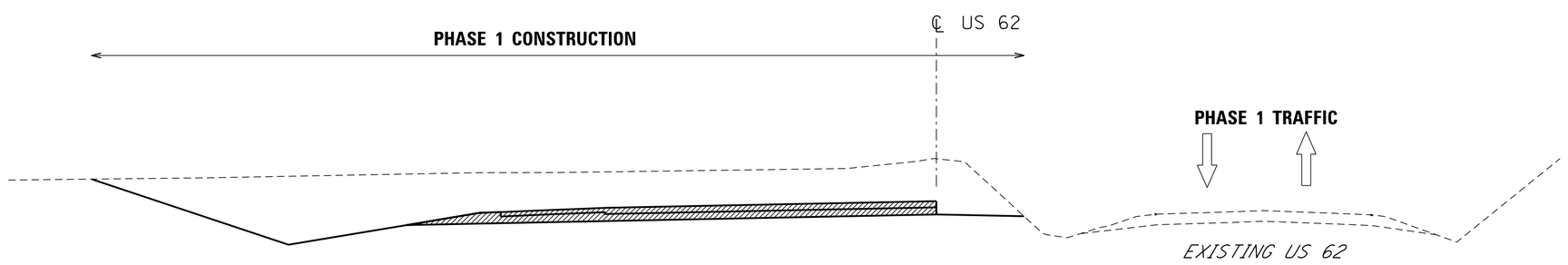

STA. 163+91 TO STA. 183+00
STA. 191+00 TO STA. 194+00
STA. 195+60 TO STA. 198+22
TYPICAL SECTION B–B

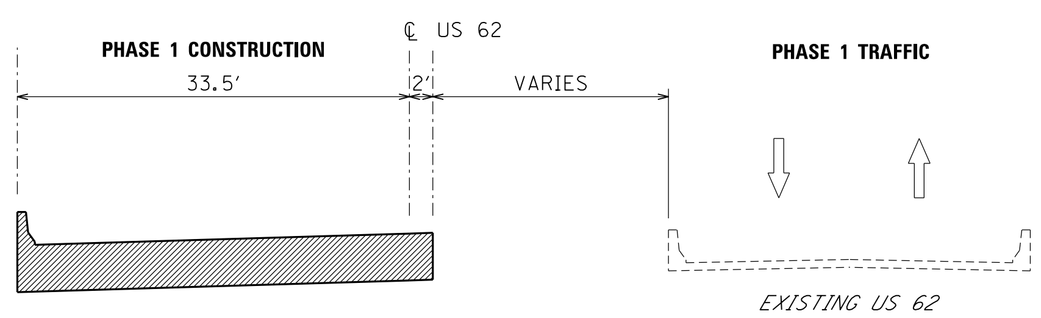

STA. 194+00 TO STA. 195+60
STA. 198+22 TO STA. 198+94
TYPICAL SECTION C–C

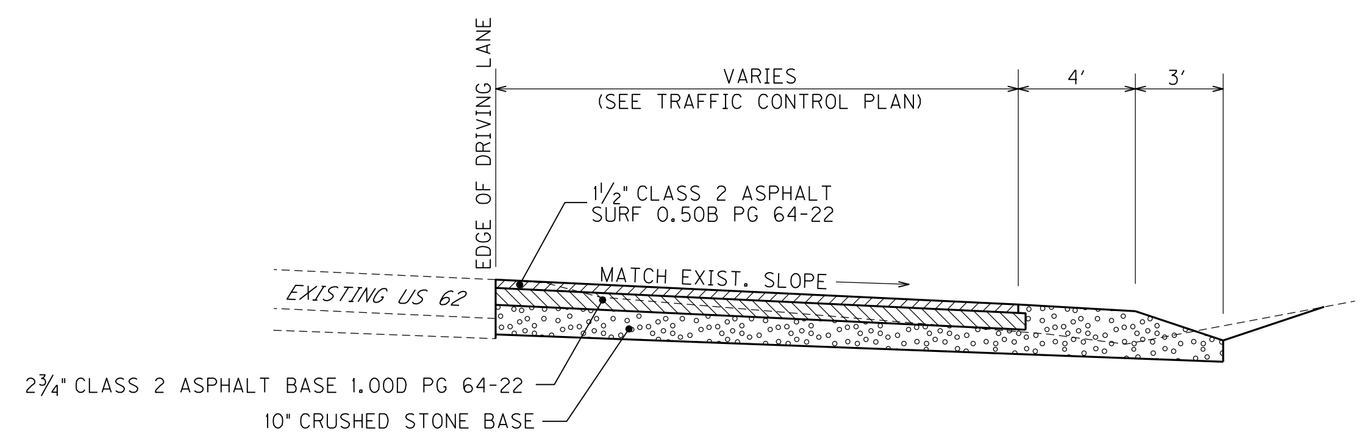

TYPICAL TEMPORARY WIDENING
US 62 PHASE 1

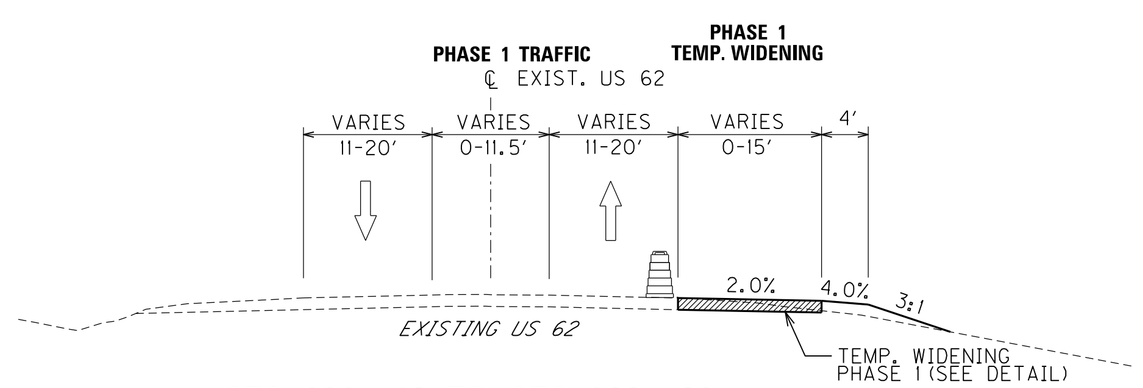

STA. 200+18 TO STA. 208+39
TYPICAL SECTION D–D

FOR MAINTENANCE OF TRAFFIC ONLY

NTS

US 62
M.O.T. PHASE 1
TYPICAL SECTIONS

FILE NAME: H:\13074 US 62 MCCRACKEN CON\1-152.00\CONTRACT PLANS AND PROPOSAL\CONTRACT PLAN SET\ROADWAY\R046OOMT.DGN
USER: FHOOVER
DATE PLOTTED: December 3, 2020
E-SHEET NAME: ———
MicroStation v8.11.9.832

COUNTY OF	ITEM NO.	SHEET NO.
McCRACKEN	1-152.00	R46

REVISED 12-4-20

MAINTENANCE OF TRAFFIC
PHASE 1

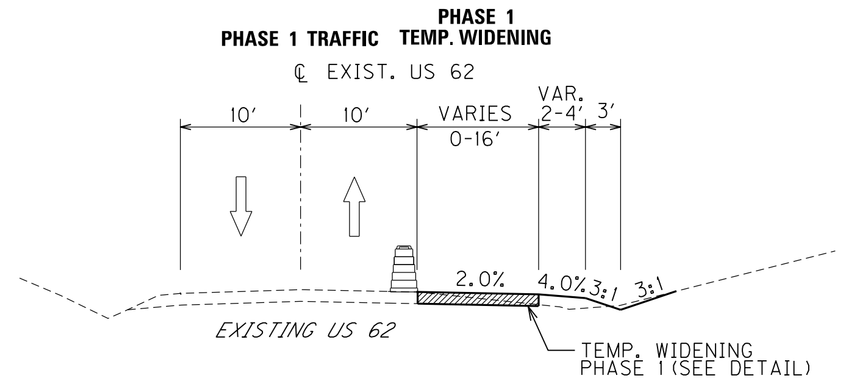

STA. 146+91 TO STA. 158+87
TYPICAL SECTION A–A

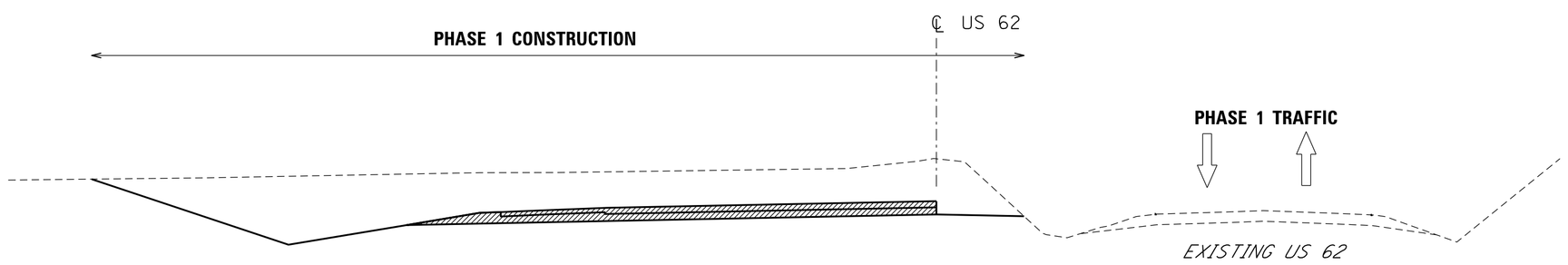

STA. 163+91 TO STA. 183+00
STA. 191+00 TO STA. 194+00
STA. 195+60 TO STA. 198+22
TYPICAL SECTION B–B

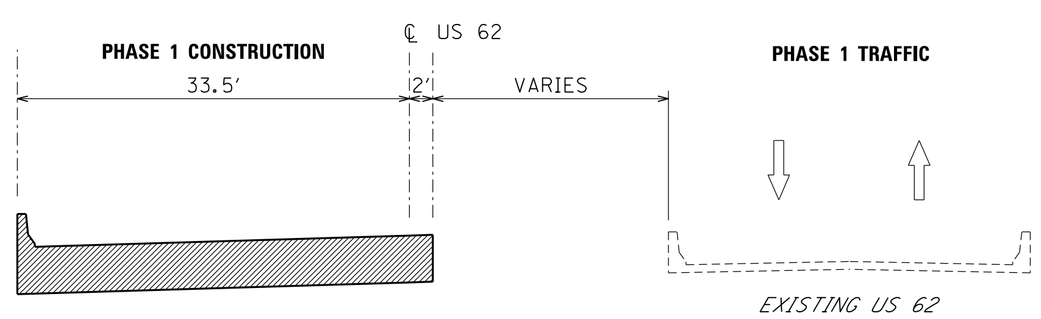

STA. 194+00 TO STA. 195+60
STA. 198+22 TO STA. 198+94
TYPICAL SECTION C–C

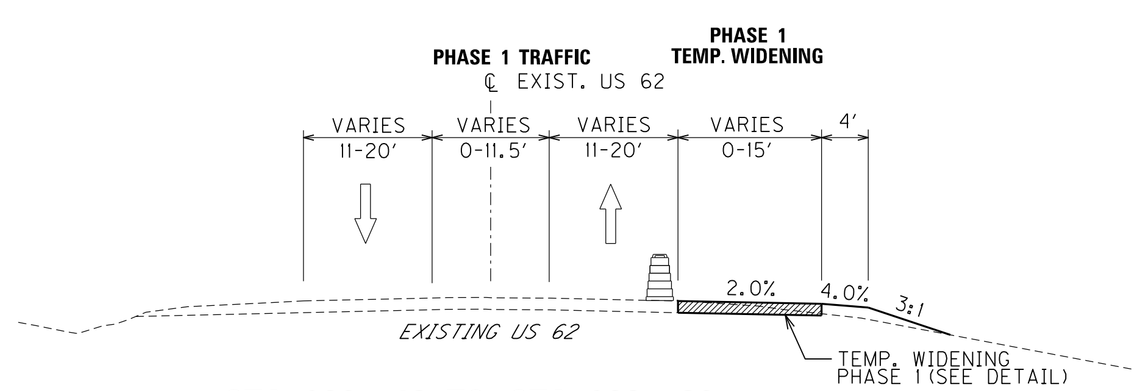

STA. 200+18 TO STA. 208+39
TYPICAL SECTION D–D

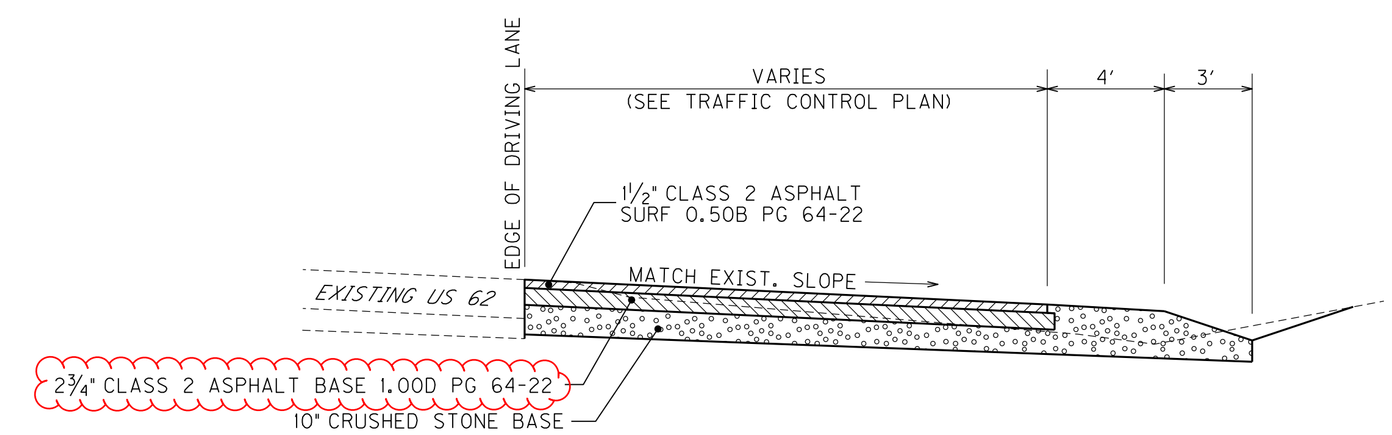

TYPICAL TEMPORARY WIDENING
US 62 PHASE 1

FOR MAINTENANCE OF TRAFFIC ONLY

NTS

US 62
M.O.T. PHASE 1
TYPICAL SECTIONS

FILE NAME: H:\13074 US 62 MCCRACKEN CO\1-152.00\CONTRACT PLANS AND PROPOSAL\CONTRACT PLAN SET\ROADWAY\R046OOMT.DGN
USER: FHOOVER
DATE PLOTTED: December 3, 2020
E-SHEET NAME:
MicroStation v8.11.9.832

COUNTY OF	ITEM NO.	SHEET NO.
McCRACKEN	1-152.00	R50

MAINTENANCE OF TRAFFIC
PHASE 2

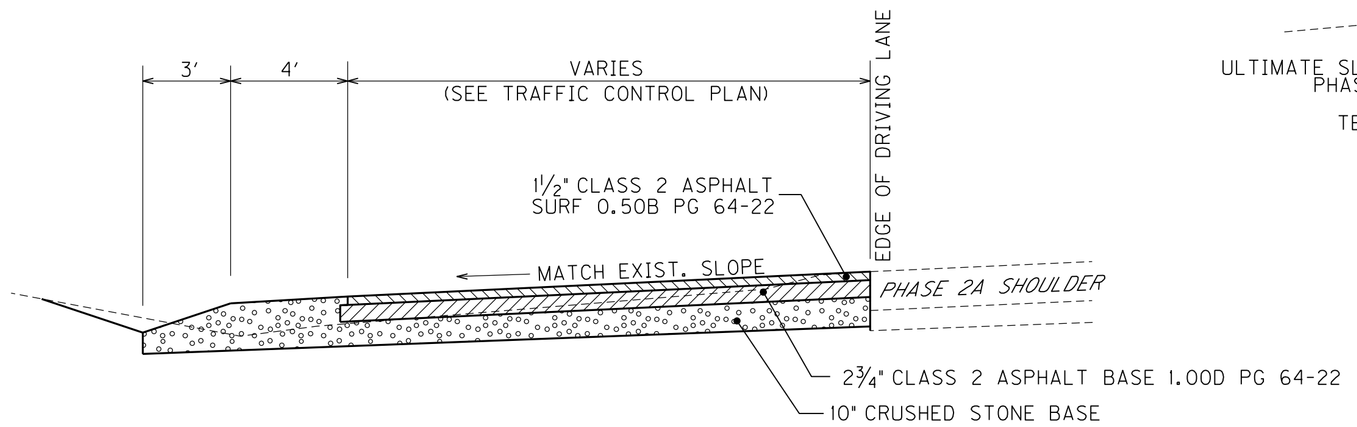

TYPICAL TEMPORARY WIDENING
US 62 PHASE 2A

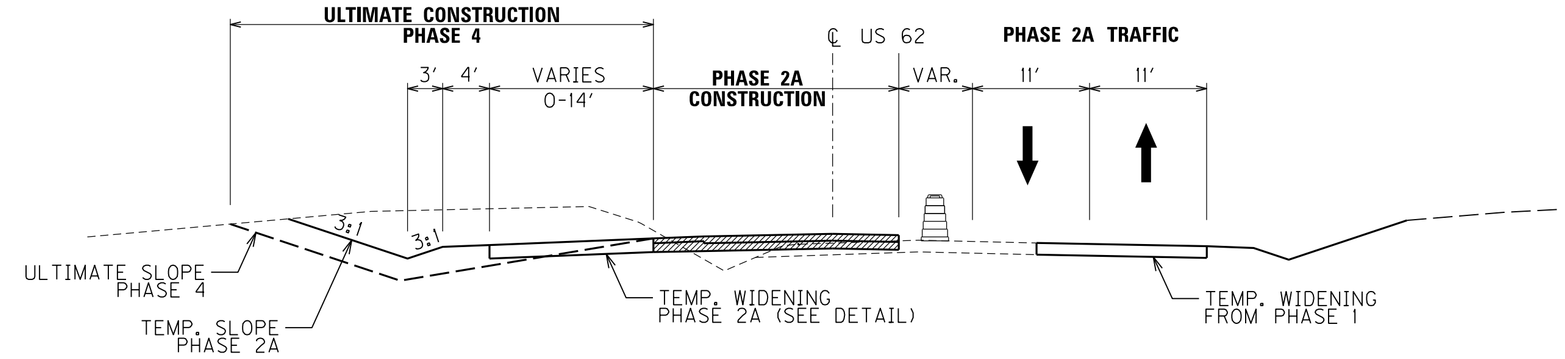

STA. 149+60 TO STA. 153+79 PHASE 2A
TYPICAL SECTION A–A

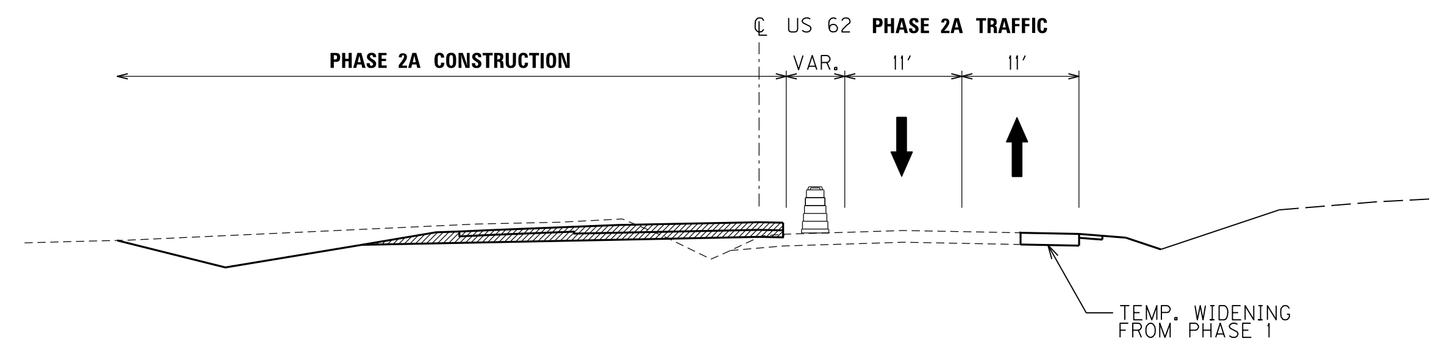

STA. 153+79 TO STA. 158+87 PHASE 2A
TYPICAL SECTION B–B

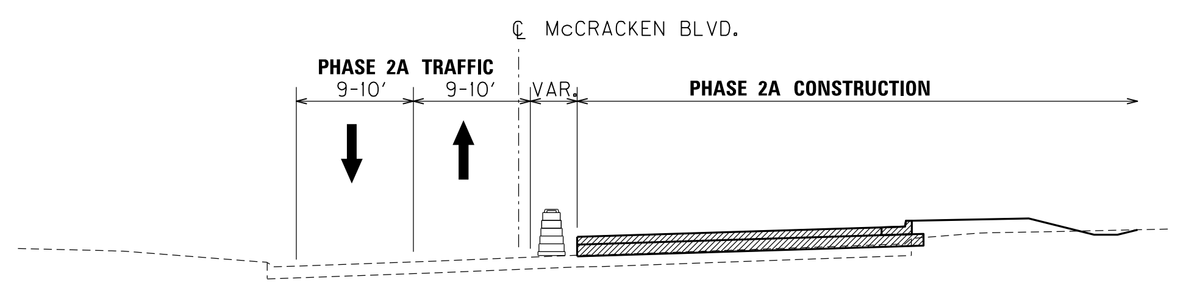

McCRACKEN BLVD.
PHASE 2A
TYPICAL SECTION C–C

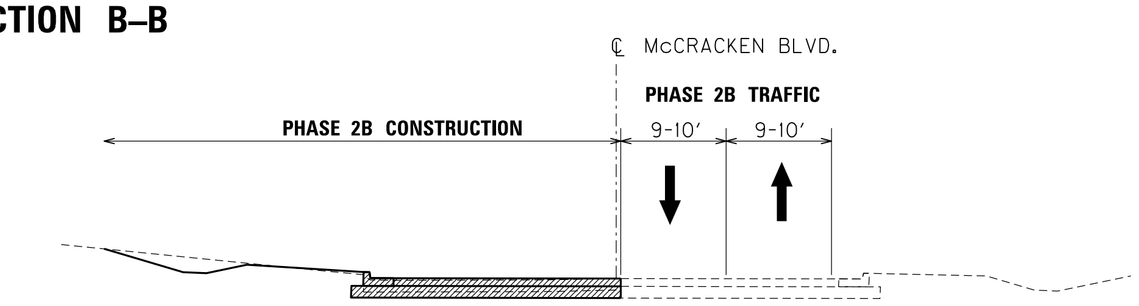

McCRACKEN BLVD.
PHASE 2B
TYPICAL SECTION D–D

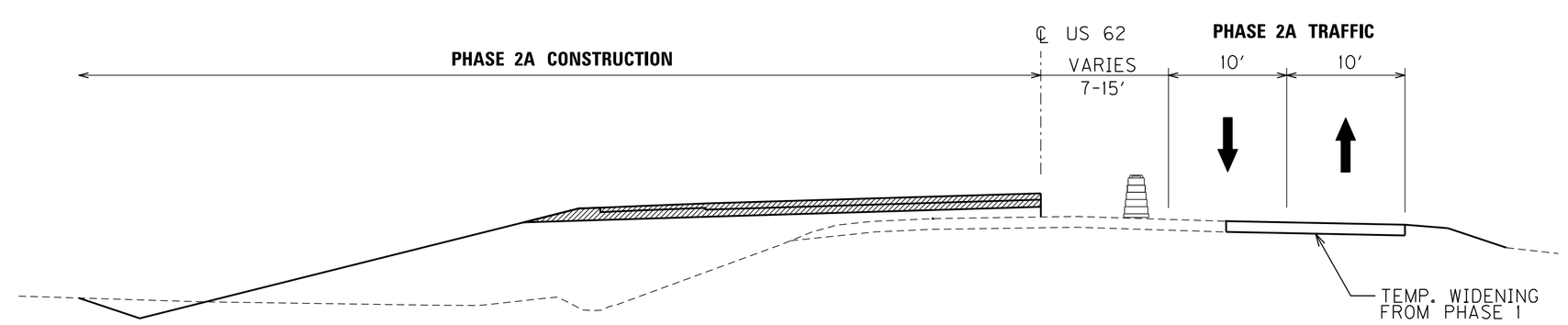

STA. 198+94 TO STA. 211+20 PHASE 2A
TYPICAL SECTION E–E

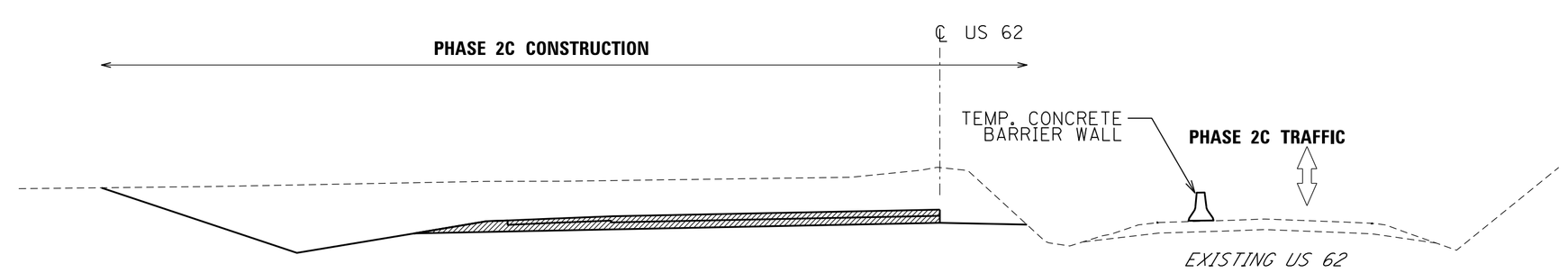

STA. 183+00 TO STA. 191+00 PHASE 2C
TYPICAL SECTION F–F

FOR MAINTENANCE OF TRAFFIC ONLY

NTS

US 62
M.O.T. PHASE 2
TYPICAL SECTIONS

FILE NAME: H:\13074 US 62 MCCRACKEN CO\1-152.00\CONTRACT PLANS AND PROPOSAL\CONTRACT PLAN SET\ROADWAY\R0500MT.DGN
USER: CSTOERGE
DATE PLOTTED: December 3, 2020
E-SHEET NAME: ——
MicroStation v8.11.9.832

COUNTY OF	ITEM NO.	SHEET NO.
McCRACKEN	1-152.00	R50

REVISED 12-4-20

MAINTENANCE OF TRAFFIC
PHASE 2

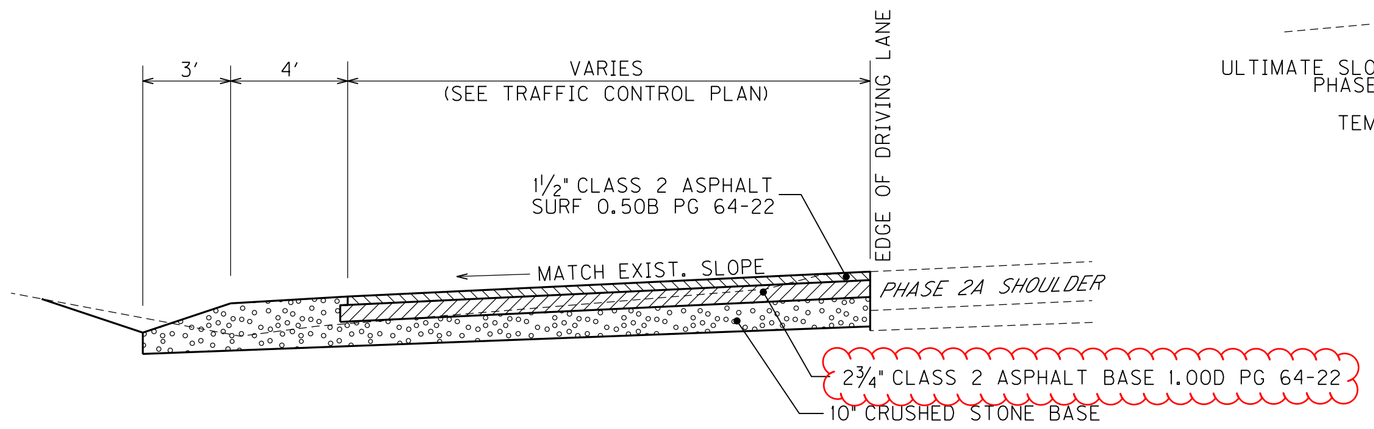

TYPICAL TEMPORARY WIDENING
US 62 PHASE 2A

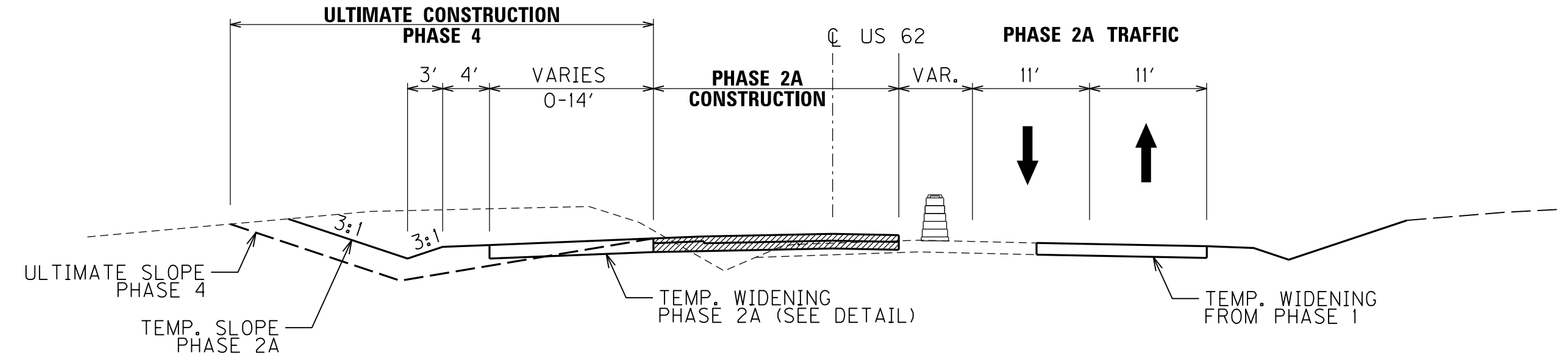

STA. 149+60 TO STA. 153+79 PHASE 2A
TYPICAL SECTION A–A

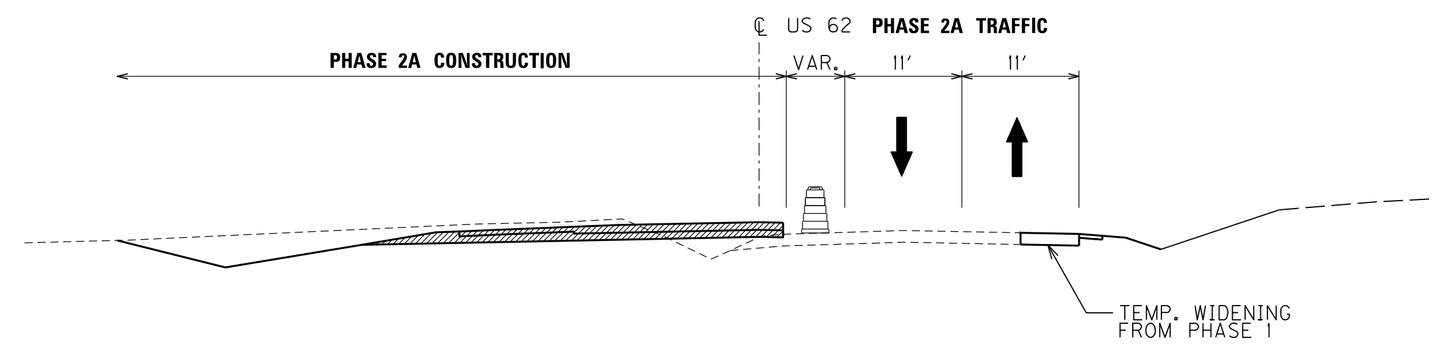

STA. 153+79 TO STA. 158+87 PHASE 2A
TYPICAL SECTION B–B

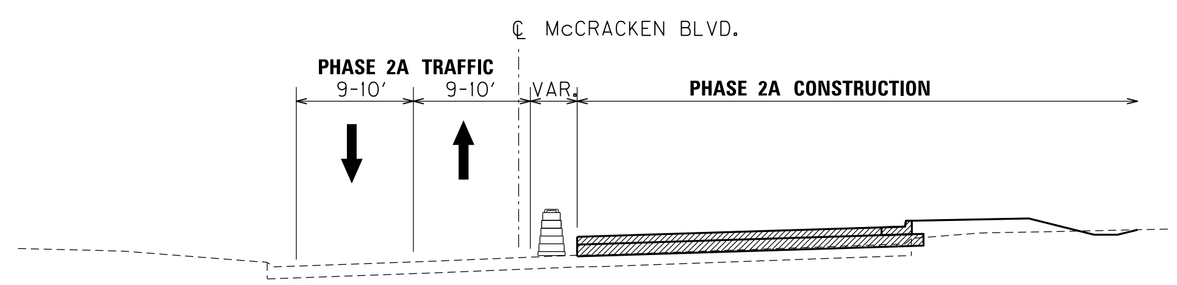

McCRACKEN BLVD.
PHASE 2A
TYPICAL SECTION C–C

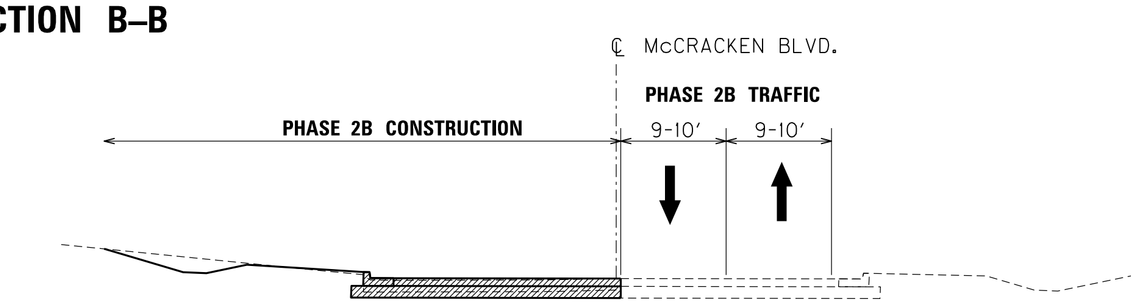

McCRACKEN BLVD.
PHASE 2B
TYPICAL SECTION D–D

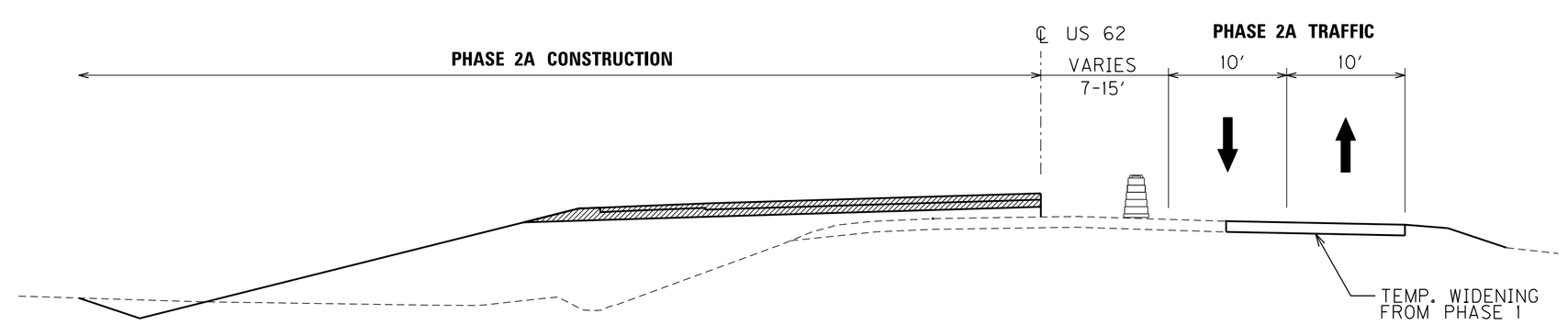

STA. 198+94 TO STA. 211+20 PHASE 2A
TYPICAL SECTION E–E

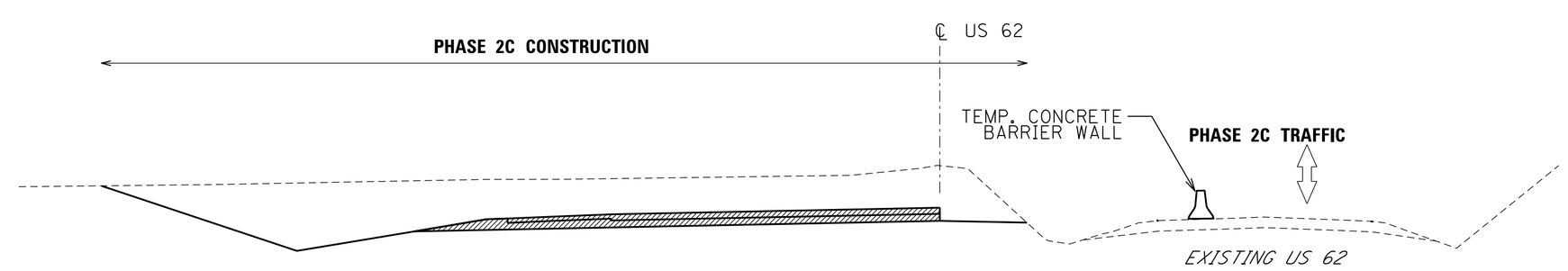

STA. 183+00 TO STA. 191+00 PHASE 2C
TYPICAL SECTION F–F

FOR MAINTENANCE OF TRAFFIC ONLY

NTS

US 62
M.O.T. PHASE 2
TYPICAL SECTIONS

FILE NAME: H:\13074 US 62 McCRACKEN CO\1-152.00\CONTRACT PLANS AND PROPOSAL\CONTRACT PLAN SET\ROADWAY\R0500MT.DGN
USER: CSTOERGE
DATE PLOTTED: December 3, 2020
E-SHEET NAME: ——
MicroStation v8.11.9.832